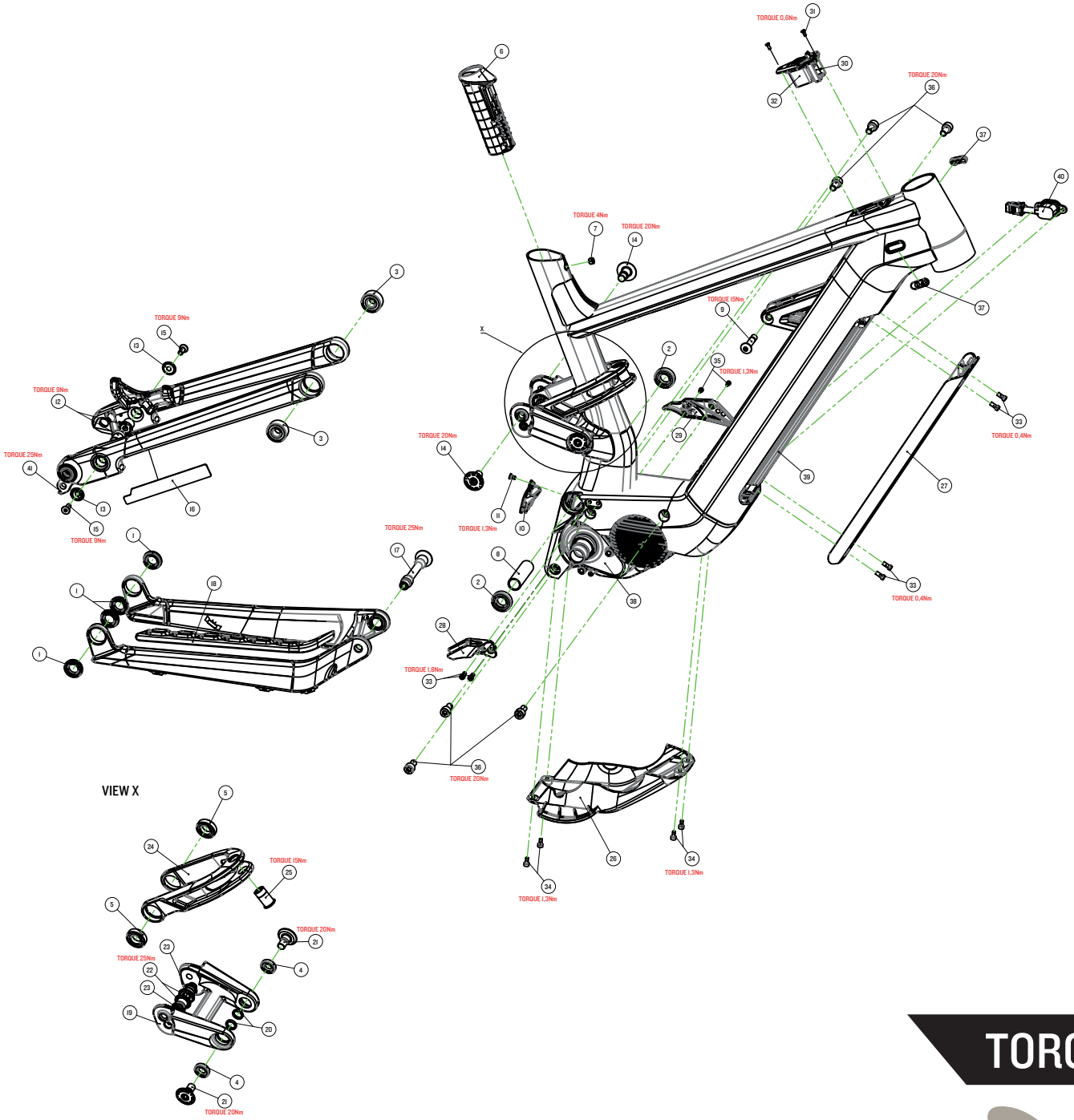

After market products			
EP/GP#	POS.NR.	QTY.	CANYON#
	41	1x	10006305
GP0351-01	1, 2, 3, 4, 5	4x 2x 2x 2x 2x	10006742
GP7086-01	20 (EP0757-01), 21 (EP1127-01), 22 (EP1128-01, 23 (EP1129-01)	1x 2x 2x 2x	10007909
GP7087-01	8 (EP1121-01), 17 (EP1125-01)	1x 1x	10007910
GP7090-01	12 (EP1122-01), 13 (EP1123-01), 15	2x 2x 2x	10007911
GP7091-01	16 (EP1434-01), 18 (EP1132-01), 28 (EP1135-01), 33	1x 1x 1x 2x	10007912
GP7092-01	14 (EP1124-01)	2x	10007913
GP7093-01	9 (EP0742-01), 25 (EP0758-01)	1x 1x	10007914
GP7094-01	10 (EP1315-01), 11, 37 (E515-16)	1x 1x 2x	10007915
GP7095-01	26 (EP1131-01), 34	1x 4x	10007916
GP7120-01	27 (EP1134-01), 33	1x 4x	10007923

TORQUE:ON | M085-01

REVISION 00 | 24.08.2021

THIS TECHNICAL DOCUMENT, INCLUDING ANY PICTURES AND VIDEOS PROVIDED, IS COPYRIGHT-PROTECTED AND INTENDED SOLELY FOR USE IN YOUR OPERATION BY DULY AUTHORIZED PERSONNEL